POREBA

TCG, TCS and TCH — Series HEAVY DUTY LATHES

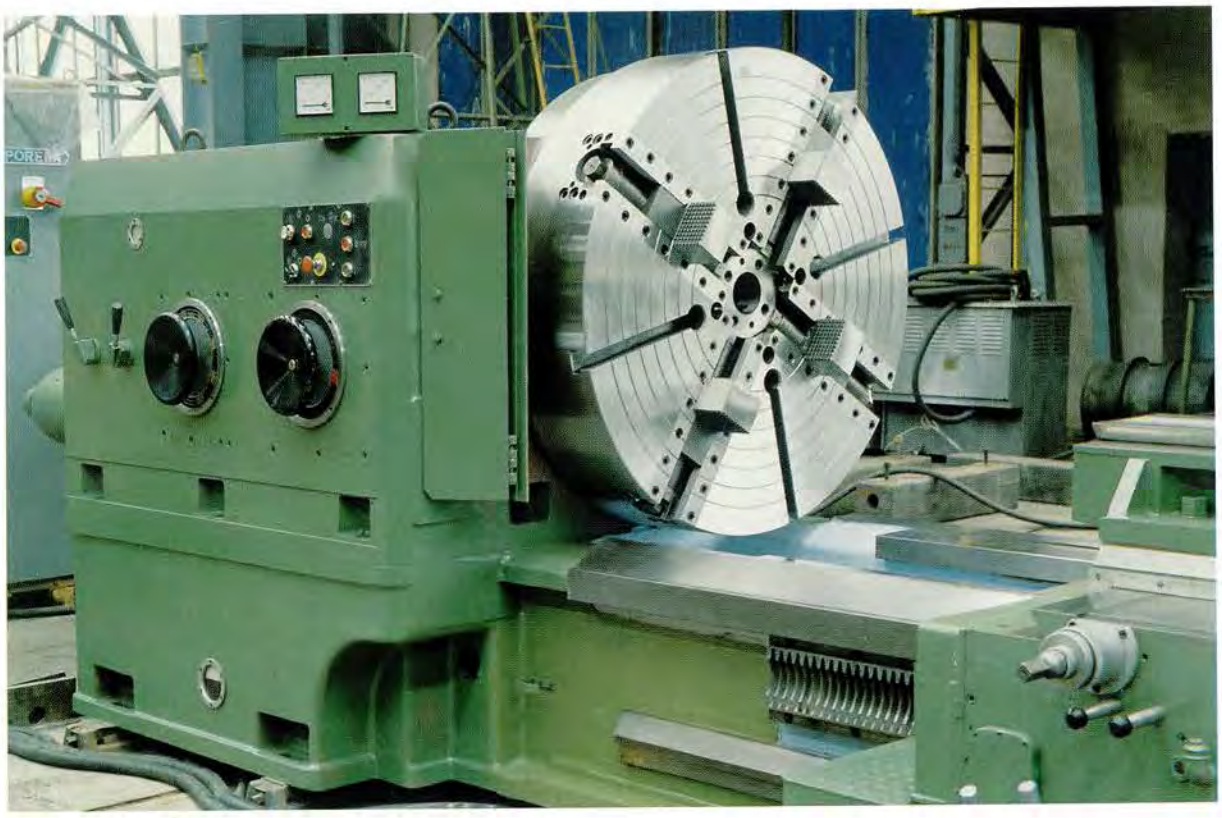

- 1250—3000 mm swing over bed
- up to 40 000 kg workpiece weight
- up to 25 000 mm between centres
- 2- and 3-way beds

GENERAL

● **Great variety of models and their versions, built around the 2-way or 3-way beds** offers to the customer the possibility of choosing the lathe configuration being the most suitable for his particular needs.

● The line covers conventional heavy duty lathes with:
— **Swing over bed 1250 to 3000 mm**
— **Distance between centres 3 to 25 m**
— **Workpiece weight up to 40 t.**

● The **TCG** series lathes are equipped **with two-way bed.**
The **TCS** series lathes are **with three-way bed and the saddle supported on all three ways.**
The **TCH** series lathes are **with three-way bed and the saddle reaching over two ways** only, i.e. with the carriage passing the tailstock.

● The **POREBA line of heavy duty lathes is based on a well proven modular design** that can easily be adapted to the customer's special requirements.

● **Wide range of special equipment** and indexing of the main spindle makes possible concentration in one setup of various operations other than turning (for ex. keyway milling).

● **Specialized versions** of the lathes **for roll-turning** and **for application in paper mill industry** are also available.

● **A selsyn drive** is used for the drive transmission from the main spindle to the carriage. This **enables to achieve high feed drive stiffness** even in lathes with very large distance between centres.

● The lathes offer the **possibility of cutting** the most common **metric and inch threads** as well as **turning long tapers** by means of applying combined feed of carriage and top slide.

● The **standard headstock** is driven by a **75 kW AC** motor with the manual selection of 24 spindle speeds. **110 kW** drive, main motor speed override or DC main motor with 6 overlapping speed ranges are also available.

● Although basically the lathes are built in accordance to POREBA accuracy standards based upon ISO recommendations. execution according to DIN or ASA alignment standard is offered as well.

● The electrical equipment may be made according to VDE, JIC or CSA standards.

● The lathes may be equipped with **digital read-out systems.**

● **The CNC versions, which are also available, are covered by a separate leaflet.**

● The lathe made in accordance with CE regulations.

BED

● The bed is designed as a sturdy, box-type casting made out of **high grade cast iron.**

● **The two-way bed is 1100 mm, while the three-way bed is 1500 mm wide.**

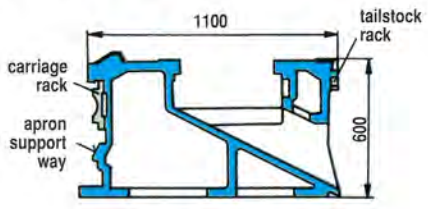

Two-way bed

● The **guideways for the saddle** are provided **with hardened steel plates.** An additional, hardened cast iron guideway supporting the apron is located in the lower part of front wall of the bed.

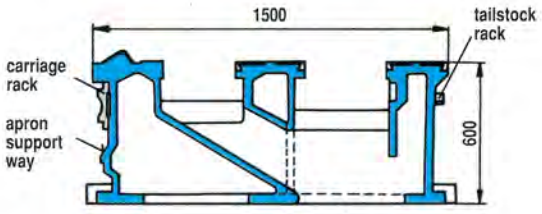

Three-way bed

● The **tailstock guideways** are made as **hardened** cast iron.

● For the lathes with up to 6 m b.c. distance, the bed is a one-piece casting. Longer lathes have the bed made out of two or more pieces. The bed is provided with a template cover bolted to its carefully machined R.H. end. This offers the possibility of extending at same later date, the bed of a lathe already installed at its user. The a.m. template will be then used while preparing the bed extension by the manufacturer of the lathe.

HEADSTOCK

● The main spindle runs in high precision **antifriction bearings.**

● All **gears** and spline shafts of the spindle drive are made out of alloy steel, **hardened and precision ground.**

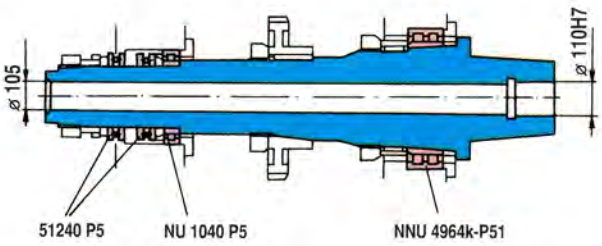

Spindle bearings

● The drive shafts are supported with short distances between their bearings to provide **smooth operation even at extreme loads.** The 24-speed gearings are arranged in such a way that a limited number of gears is in mesh at the high speed range.

● The cast steel 4-jaw chuck plate is factory mounted onto the spindle. Front and rear protection covers are provided for the chuck plate.

● Push-button station located at the headstock incorporates the controls for the spindle.

● **Ammeter and spindle speed indicator** are standard accessories for the headstock.

TAILSTOCK

● The **robust tailstock** with **280 mm dia quill** is provided with rapid traverse along the bed. The quill is as well with power drive.

● **Rotary spindle of the tailstock** is supported in high precision antifriction bearings. A special device is provided to lock the rotation of the spindle when it is necessary — for ex. while drilling operations.

● The tailstock is equipped with **axial thrust indicator** for better safety of work-holding. A **system compensating workpiece length** distortion due to temperature changes is provided as well. The tailstock is equipped with a separate push-button pendant station.

● A **super-duty tailstock** with **450 mm dia quill** is available as option.

● The special version of tailstock with **3-jaw or 4-jaw chuck** mounted on its spindle may also be supplied.

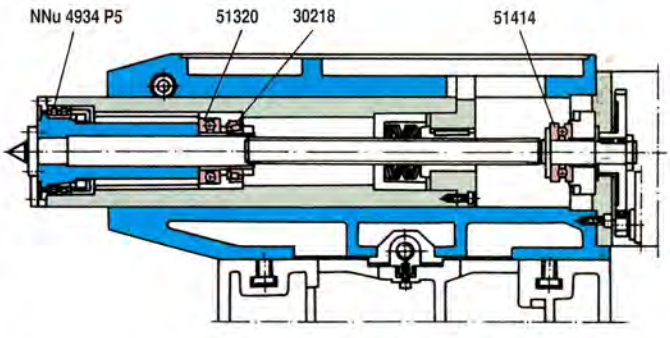

Tailstock

CARRIAGE

● The saddle ways are lined or cast with low-friction material such as TURCITE, DIAMANT or SKC-3.

● For the travel of the carriage along the bed the **drive with a bronze worm matched with high grade cast iron worm-rack** is used.

● The **guideways** of the cross slide and of the standard top slide are **hardened.**

● **Screwcutting** with feeding the carriage is possible with all versions of the lathes.

● The lathes equipped with standard top slide enable **turning and screwcutting** by feeding the toolpost along the top slide as well as **turning of tapers** using the combined feed of carriage and top slide.

● **Large variety of configuration of toolposts and top slides,** some of which being interchangible, offers high versatility of application of the lathes.

● The **apron** is equipped with magnetic clutches, offering push-button operation of feed and rapid traverse movements.

● The carriage has the **operator's platform** with main push-button station.

LUBRICATION

● **In its standard** version the headstock and apron lubrication is automatic, whereas the lubrication of slide and tailstock by hand operated lubricating oil pump.

● **In special version** the lubrication of all units is automatic.

VARIOUS CONFIGURATIONS OF CROSS- AND TOP SLIDES:

1) standard execution: standard top slide on the swivel base — equipped with tool slide with **single-tool toolpost**
2) same as 1, but with **4-way toolpost** instead of single-tool toolpost
3) special **box type toolpost** installed on standard top slide
4) special **boring-bar toolpost** installed on standard top slide
5) **single-shelf toolpost** installed instead of standard top slide
6) **double-shelf toolpost** installed instead of standard top slide
7) special **toolpost for convex and concave turning of rolls,** instead of standard top slide

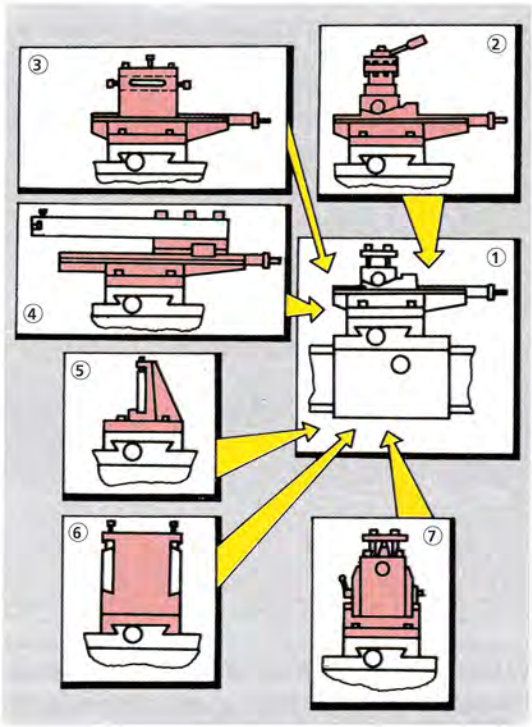

Please note: Turning and screwcutting with top slide feed is possible with versions 1 through 4, which are provided with standard top slide.
The remaining versions do not offer this feature.

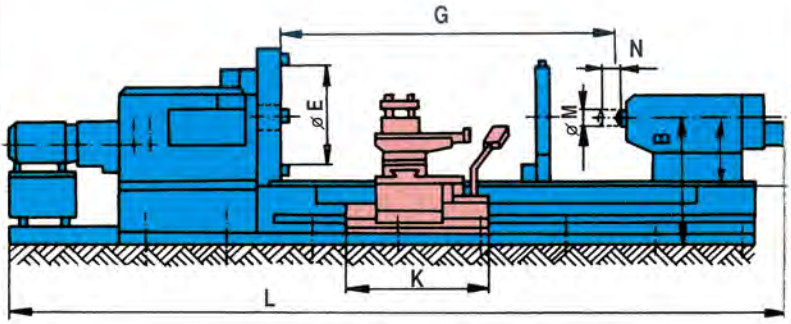

TCG

TECHNICAL SPECIFICATION

			Seri
			125
CAPACITIES			
Height of centres over the flat way	A	mm	625
Height of centres over the floor	B	mm	1225
Swing over bed		mm	1250
Swing over carriage		mm	940
Dia of four-jaw chuck	E	mm	1250
Workholding range of the chuck: min/max		mm	230/1050
Distance between centres	G	mm	3000
HEADSTOCK			
Spindle bore		mm	
Spindle seat			C
Dia of the spindle in the front bearing		mm	
Number of spindle speeds			
Overall range of spindle speeds		rpm	1.6—315
Spindle drive motor rating		kW	
Maximum torque of the spindle		Nm	6
CARRIAGE			
Width of the bed		mm	1
Length of the saddle	K	mm	1
Width of the cross slide		mm	
Travel of cross slide		mm	
Travel of tool slide		mm	
Number of feed rates for each range			
Overall range of longitudinal feed rates		mm/rev	0.1
Range of longitudinal feed rates at: — high range of spindle speeds — middle range of spindle speeds — low range of spindle speeds		 mm/rev mm/rev mm/rev	 0.1 0.1 0.7
Overall range of metric threads		mm	1-
Overall range of inch threads		tpi	30
Overall range of mm per minute feed rates		mm/min	11.
Longitudinal rapid traverse		mm/min	4
Rapid traverse motor rating		kW	
TAILSTOCK			
Diameter of tailstock quill	M	mm	
Dia of tailstock spindle in front bearing		mm	
Seat (taper) of tailstock centre			C
Travel of tailstock quill	N	mm	
Rapid traverse of tailstock quill		mm/min	
Rapid traverse of tailstock along the bed		mm/min	1
OVERALL DIMENSIONS AND WEIGHT			
Length of the lathe greater than distance between centres	L	mm	4
Width of the lathe		mm	2200
Height of the lathe		mm	1930
Load carrying capacity in the chuck while the distance of gravity centre from the face of the chuck is equal to 350 mm		t	
Load carrying capacity between centres: — without stadies — with one steady — with two steadies		 t t t	
Net weight of the lathe with the shortest b.c. distance		t	28
Additional net weight for each 1 m length of the lathe		t	

TCG

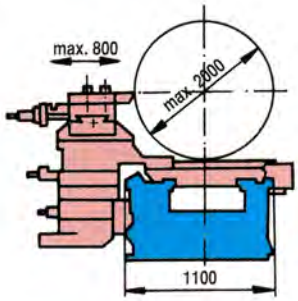

TCS

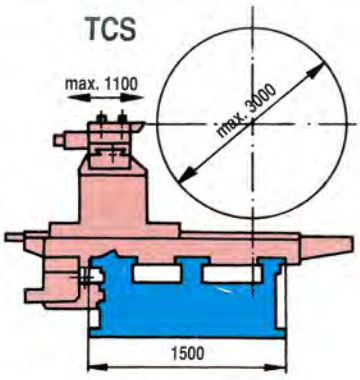

TCH

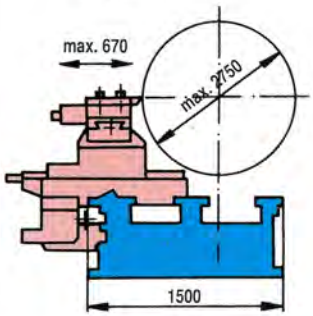

Series TCG			Series TCS						Series TCH				
125	**160**	**200**	**160**	**200**	**224**	**250**	**275**	**300**	**160**	**200**	**224**	**250**	**275**
625	800	1000	800	1000	1125	1250	1375	1500	800	1000	1125	1250	1375
1225	1400	1600	1400	1600	1725	1850	1975	2100	1400	1600	1725	1850	1975
1250	1600	2000	1600	2000	2250	2500	2750	3000	1600	2000	2250	2500	2750
940	1280	1680	1280	1680	1800	2000	2235	2500	1280	1680	1800	2000	2235
1250	1600		1600		1600/2000				1600		1600/2000		
230/1050	230/1400		230/1400		230/1400—250/1800				230/1400		230/1400—250/1800		
3000—25000			3000—25000						3000—25000				
105			105						105				
Cyl. 105			Cyl. 110						Cyl. 110				
320			320						320				
24			24						24				
1.6—315	1—200		1—200		0.8—160/0.5—100				1—200		0.8—160/0.5—100		
75			75						75				
63000			63000						63000				
1100			1500						1500				
1320			1400						1320				
550			550						550				
800			1100						670				
600			600						600				
20			20						20				
0.18—160			0.18—160						0.18—160				
0.18—5 0.18—40 0.72—160			0.18—5 0.18—40 0.72—160						0.18—5 0.18—40 0.72—160				
1—192			1—192						1—192				
30—1/8			30—1/8						30—1/8				
11.2—320			11.2—320						11.2—320				
4000			4000						4000				
4			4						4				
280			280						280				
170			170						170				
Cyl. 70			Cyl. 70						Cyl. 70				
200			200						200				
300			300						300				
1500			1500						1500				
4700			5300						5300				
2200	2400	2750	3200						3000				
1930	2300	2400	2200	2400	2800	2900	3050	3150	2200	2400	2600	2900	3050
4			4						4				
30 35 40			30 35 40				25 30 35	20 25 30	30 35 40				25 30 35
28	30	33	34	37	39	41	43	45	33	36	38	40	42
1,3			1,6						1,6				

STANDARD AND OPTIONAL EQUIPMENT

Standard equipment

— Four-jaw 1250, 1600 or 2000 mm diam. chuck plate with jaws
— Flange centres 60° — 2 pcs (one each for headstock and tailstock)
— Tool post (tool shank height 70 mm)
— Set of 54 change gears for thread cutting and taper turning
— Set of foundation bolts (the number depends upon turning length)
— Set of levelling blocks (the number depends upon turning length)
— Spindle speed indicator and ammeter
— Tailstock axial thrust
— Set of service tools and spanners (including a ratchet spanner) lubrication gun
— Operator's manual

Optional equipment

— Plain jaw following steady, capacity 70—250 mm (TCG only)
— Roller jaw stationary steady, capacity 100—400 mm
— Roller jaw stationary steady, capacity 250—600 mm
— Roller jaw stationary steady, capacity 400—800 mm (without TCG 125)
— Roller jaw stationary steady, capacity 700—1100 mm (without TCG 125)
— Open type roller jaw stationary steady, capacity 700—950 mm (TCG 125 only)
— Open type roller jaw stationary steady, capacity 1000—1200 mm (size 160 only)
— Open type roller jaw stationary steady, capacity 400—1300 mm (size 160 only)
— Other sizes of the steadies — on request
— Hydraulic longitudinal copy-turning attachment
— Hydraulic transversal copy-turning attachment
— Top slide mounted grinding attachment
— Indexing device for the main spindle
— 1,5 kW milling attachment
— Heavy duty 6,5 kW milling attachment (without TCG 125)
— Morse taper adaptors for main spindle and tailstock
— Flanged, cylindrical shaft centres with 75, 80 or 90° centre tip
— Chip conveyor
— Coolant system
— Levelling bridge

Steadies

With the exception of following steady, which is equipped with plain-jaws, all the other steadies are with roller jaws.
The fixed steadies are equipped with couplings, enabling to move them along the bed using the rapid traverse movement of either the carriage or the tailstock.

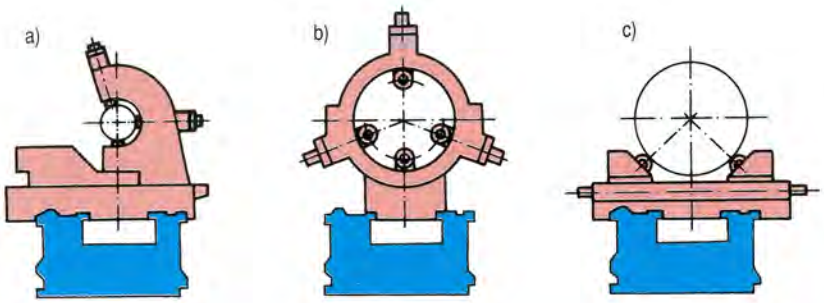

a) Following steady
b) Standard type stationary steady
c) Open type stationary steady

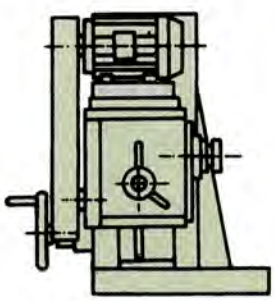

Milling Attachments

There is a choice of two milling attachments, being mounted on the place of top slide.
The feature of feed per minute selection offered by the standard carriage simplifies performing of all milling operations. The longitudinal feed is realized by feeding the carriage, the cross feed — by feeding the cross slide while for the vertical feed the drive chain to the top slide is used.

Basic Data:

Parameters / Size	1.5 kW	6.5 kW
Quill travel	180 mm	200 mm
Motor	1.5 kW	5.2/6.5 kW
Spindle speeds	63—630 rpm	16—25/32—1000 rpm
Number of spindle speeds	6	3/16
Spindle nose taper	ISO 40	ISO 50

Grinding Attachment

Is mounted onto the top slide in place of a toolpost. Its application is possible on the lathes with cross and top slide (configurations 1 through 4).

Basic Data:

Grinding wheel motor power	kW	1.5
Speed of the grinding wheel	rpm	2000
Grinding wheel dia×width	mm	350×22

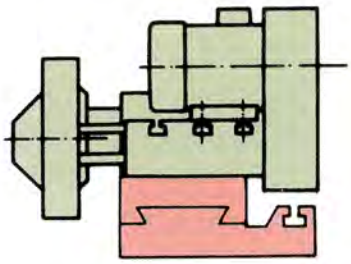

SPECIAL VERSIONS OF THE LATHES AND THEIR BASIC SUBUNITS:

— Lathes **with cylinder boring attachment**
— Lathes **with convex/concave turning attachments**
— Lathes specialized **for profile roll turning**
— Lathes **with deep boring attachment**
— Lathes **with copy-turning attachment, with or without the feature of thread cutting** with feeding top slide
— Lathes **with two carriages**
— Lathes **with cross- and top slide in configuration other than standard:**
  1. Top slide on the swivel base with 4-way toolpost
  2. Special box type toolpost installed on standard top slide
  3. Special boring-bar toolpost installed on standard top slide
  4. Single-shelf toolpost installed instead of standard top slide
  5. Double-shelf toolpost installed instead of standard top slide
  6. Special toolpost for convex and concave turning of rolls, instead of standard top slide
— Lathes **with extra high spindle speed range** (up to 600 rpm)
— Lathes **with electries suitable for other power supply then 3×380 V, 50 Hz** and/or mode according to specific standards
— Lathes **with inch dials**
— Lathes **with 110 kW main motor,** which spindle speed override feature or with DC main motor
— Lathes **with extended travel of tailstock quill or with tailstock with 450 mm dia quill**
— Lathes equipped **with tailstock 3-jaw or 4-jaw chuck**
— Lathes **with automatic way lubrication systems** for carriage and tailstock
— Lathes **with other standard top slide configuration**
— Lathes **with digital readout equipment**

Please note: Various combinations of above listed special versions are available.

Lathes for machining of paper-rolls

These specialized lathes offer possibility of performing boring operations besides turning.
The **boring diameter is up to 1800 mm** (depending the size of the lathe and boring bar) and the **boring length up to 11 m.**
The boring tool (1) travels on the boring bar (2), being pushed by means of the rod (3). The paper roll is clamped in a special lantern chuck (4).

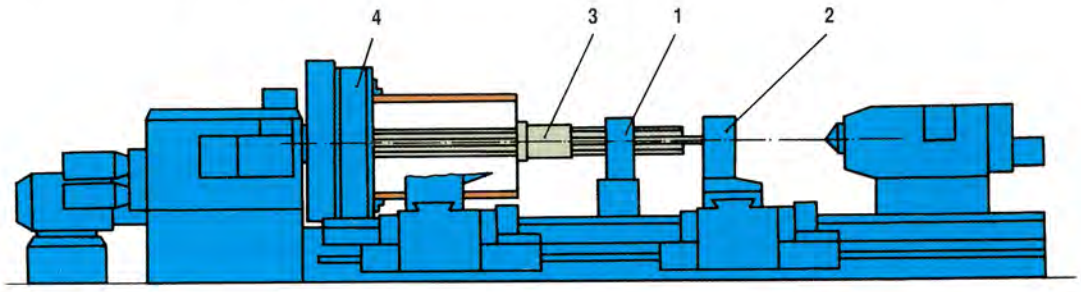

The following boring bars are available:
— octagonal 135, 230 and 320 mm
— round 560 mm
These lathes can be also equipped with the carriage with convex/concave turning attachment, allowing maximum change of diameter of up to 12 mm.

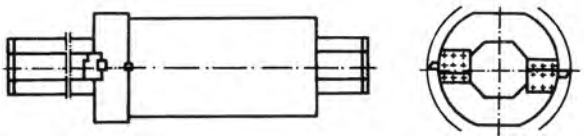

Lathes with deep hole boring attachment

Although PORĘBA is manufacturing the deep hole boring machines, for some customers, who have not very intensive deep hole boring programme, a version of the standard centre lathe with deep hole boring attachment is also offered.
The attachment works using **BTA principle,** with pressure head and oil supply on the outside of the boring tool and oil/chip removal through the bore in the boring tool.
The **boring length** may be **up to 8 m. Diameters up to 150 mm** may be machined **by standard boring, 120 to 250 mm by trepanning and up to 650 mm by reboring.**

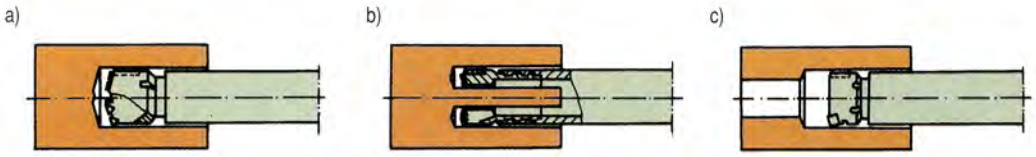

BTA-System:
a) Standard boring
b) Trepanning
c) Reboring

Copy-Turning Attachments

There is a choice of application of either hydraulic or electric copy-turning attachment. In both cases the template support brackets are clamped to the front way of the bed.
The maximum distance between these brackets is 5 m.
For copy-turning with cross feed the template is hold by the brackets fixed onto the tailstock ways.
Hydraulic copy-turning attachment will be mounted instead of the top slide. Its power pack is attached to the rear part of the saddle.
Basic Data:

Stroke of the copy-turning slide	mm	346
Travel of the tool slide	mm	100

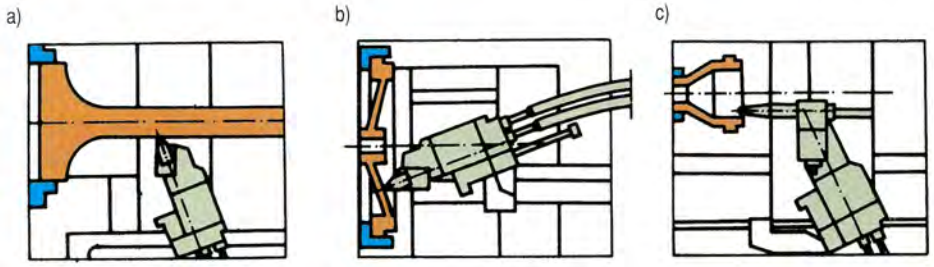

a) longitudinal copying
b) transverse copying
c) internal copying

By application of electric copy-turning attachment, the lathe is equipped with a special apron, equipped with special magnetic clutches, allowing copy-turning in two axes.
In such case, the feed per minute feature and thread cutting by feeding the carriage are not available, while taper turning requires its copy-turning.

Lathes for turning of steel mill-rolls

These specialized lathes are used basicaly for reconditioning of rolls. The options available include steadies for master roll, lamell toolholders for gang tools and the tailstock with the chuck.

Working area of lathe
for turning of steel mill-rolls

POREBA

Bed

The bed made of twin-guideways is a box-type design produced from high-grade pearlite cast iron. It is provided with four ways.

The prismatic front way and the flat rear slide way are for guiding and supporting the saddle. They are lined with steel strips of 60 HRc. The two inner flat ways are meant for supporting the tailstock and steady rests. On the front wall there is an oblique guideway supporting the slide of the saddle. The bed is provided with special openings and chutes facilitating the removal of chips at the rear of the lathe. The beds of lathes up to 6000 mm = 23 feet distance between centers are cast in one piece.

The beds of longer lathes are cast in two or three pieces up to 20,000 mm = 65 feet and bolted together.

The bottom part of the bed is machined and adapted to set up the machine on levelling wedges.

The bed width is 1100 mm = 43". The worm rack is located in the front part of the bed in order to obtain the saddle longitudinal feeds.

The font prismatic guideway of 90° and the other ways are ground, and designed to carry very powerful cutting forces.

The use of hardened inserts, high rigidity of bed castings stress relieving treatment and precise machining ensure long-life and accurate operation of all assemblies set on the bed.

TCG 125/160/200

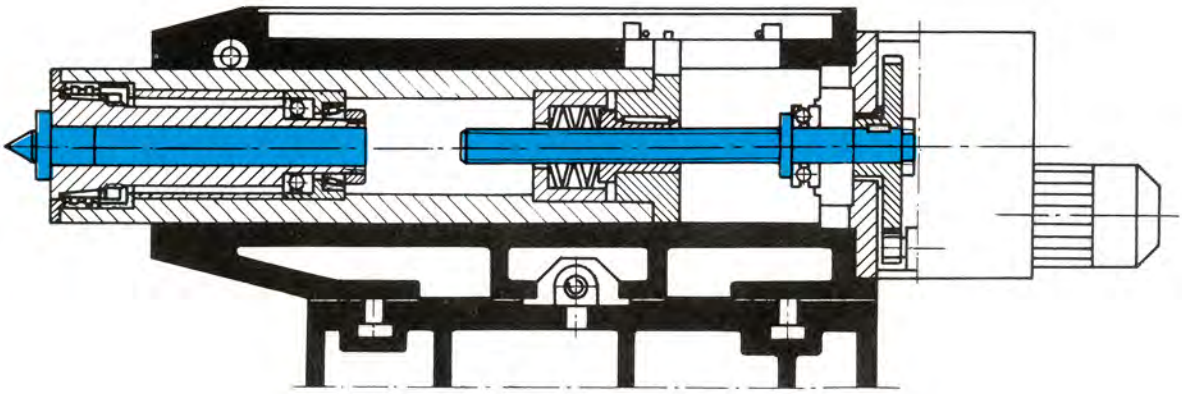

Tailstock

The tailstock travels along inner flat bedways. The tailstock body slideways have bronze lining strips. The position of the tailstock on the bed is set up by means of a pawl ratchet fastened by lug relief to the bed. Additionally, the tailstock is fixed by means of inner grips to the bottom part of guideways. The tailstock quill of dia. 280 mm — 11'' has mechanical travel up to a max. 200 mm — 7⅞''. The tailstock spindle is arranged in the quill on antifriction precision roller bearings. Constant pressure of the tailstock center to the workpiece is ensured by the application of disc springs compensating the temperature influence. The pressure force rate shows an indicator gauge located on the tailstock body.

The upper part of the tailstock can be traversed from the machine axis by ±30 mm, ±1.18''.

The tailstock travel along the bed is effected mechanically by means of a special gearbox. All movements are controlled from the tailstock control panel.

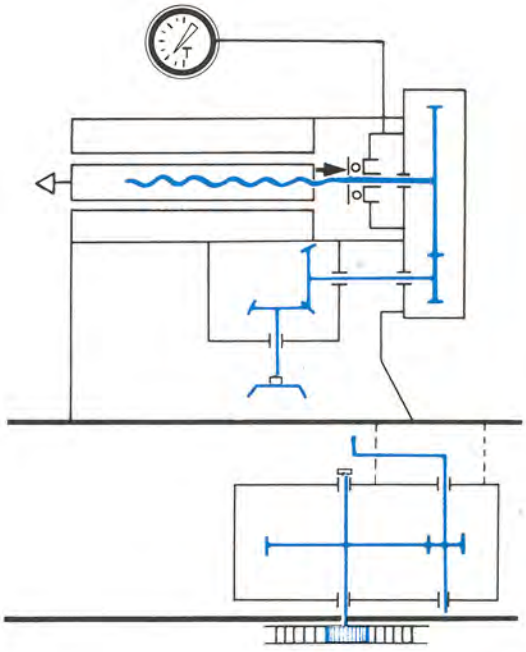

POREBA

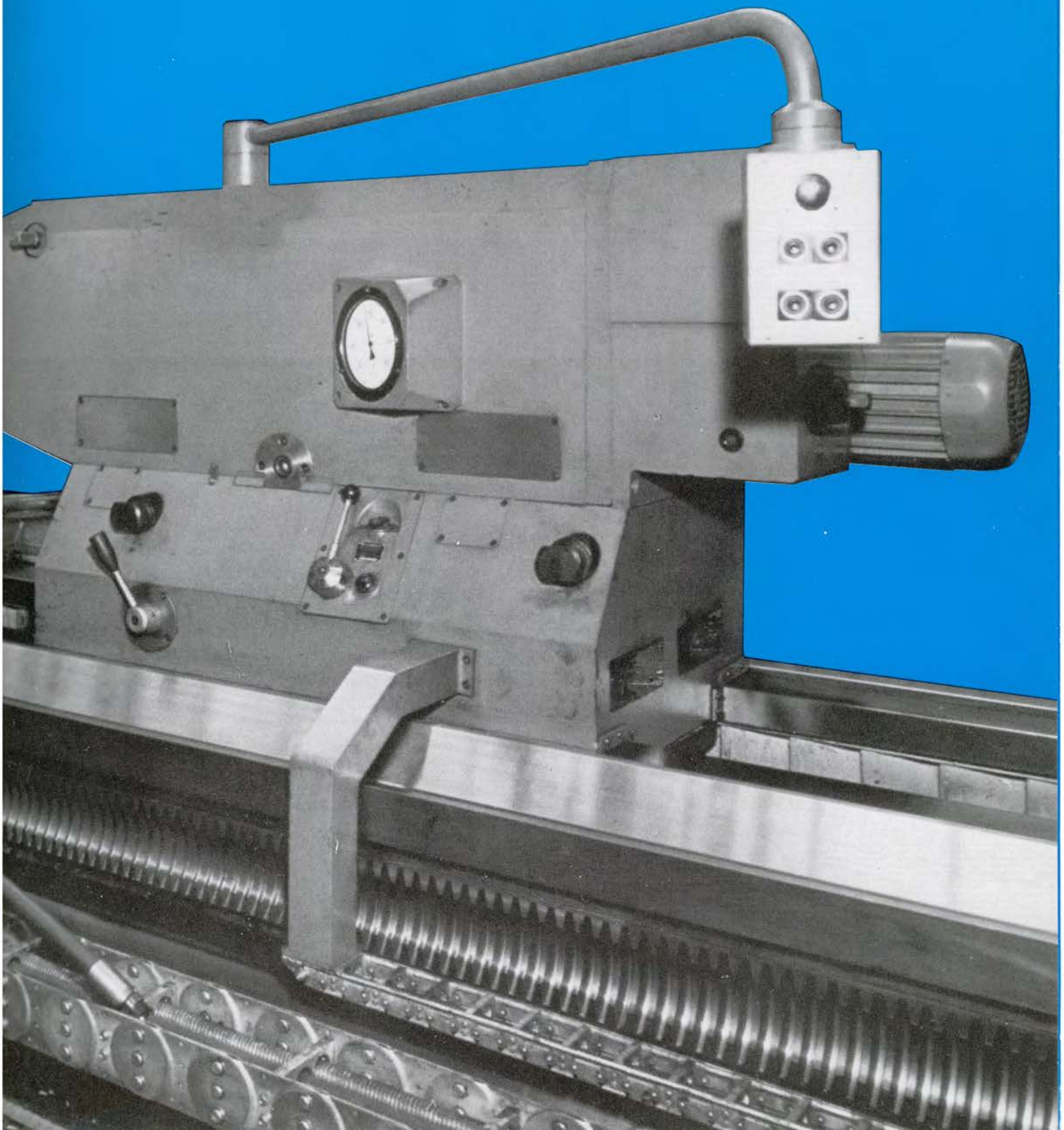

Special equipment

Steady rests	Diameter	TCG 125	TCG 160	TCG 200	Numbers of rollers
Follow rest	60—250 mm 2 1/32'' — 9¾''	x	x	x	3 slides
Stationary steady rest-closed	100—400 mm 4'' — 15¾''	x	x	x	3 slides
Stationary steady rest-closed	250—600 mm 9¾'' — 23⅝''	x	x	x	4 slides
Stationary steady rest-closed	400—800 mm 15¾'' — 31½''		x	x	4 slides
Stationary steady rest-open	700—950 mm 27½'' — 37½''	x			2 slides
Stationary steady rest-closed	700—1100 mm 27½'' — 43¼''		x	x	4 slides
Stationary steady rest-open	1000—1200 mm 40'' — 47½''		x		2 slides
Stationary steady rest-open	1000—1600 mm 40'' — 63''			x	2 slides

Travelling steady rest (follower) mounted on the cross slide is used for supporting the shafts of small diameter or low rigidity, during turning operations.

The rigid design of stationary steady rests with rollers mounted in roller bearings, supported on both ends allows for the use of the machine for turning workpieces of heavy weight.

The traverse of steady rests is performed by means of the saddle and suitable catches. Both guideways and slides are lubricated by a hand-operated Willy Vogel pump.

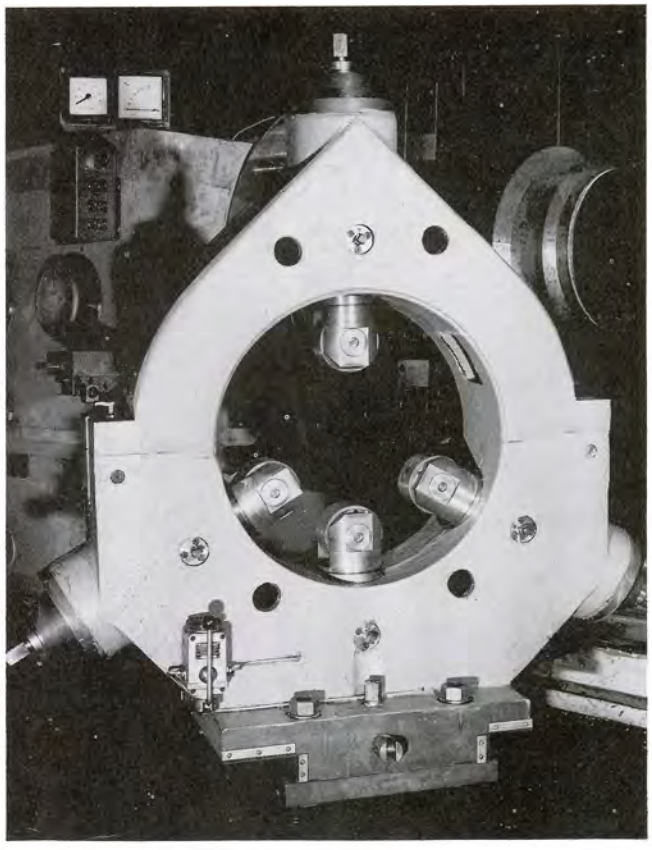

Shelf type cross slide (for TCG 125)

Width of shelves	95 mm — 3¾''
Max. turning dia. over saddle	940 mm — 37''
Depth of gashing without moving the shelf	250 mm — 10''

For TCG 160/200 to be agreed upon.

TCG 125/160/200

Headstock

The headstock of rigid design provides 24 speeds within 3 ranges:

Range		TCG 125	TCG 160	TCG 200
I (A)	r.p.m.	1.6 — 8	1 — 5	0.8 — 4
II (B)	r.p.m.	10 — 50	6.3 — 31.5	5 — 25
III (C)	r.p.m.	63 — 315	40 — 200	31.5 — 160

Ranges A and B are pinion driven

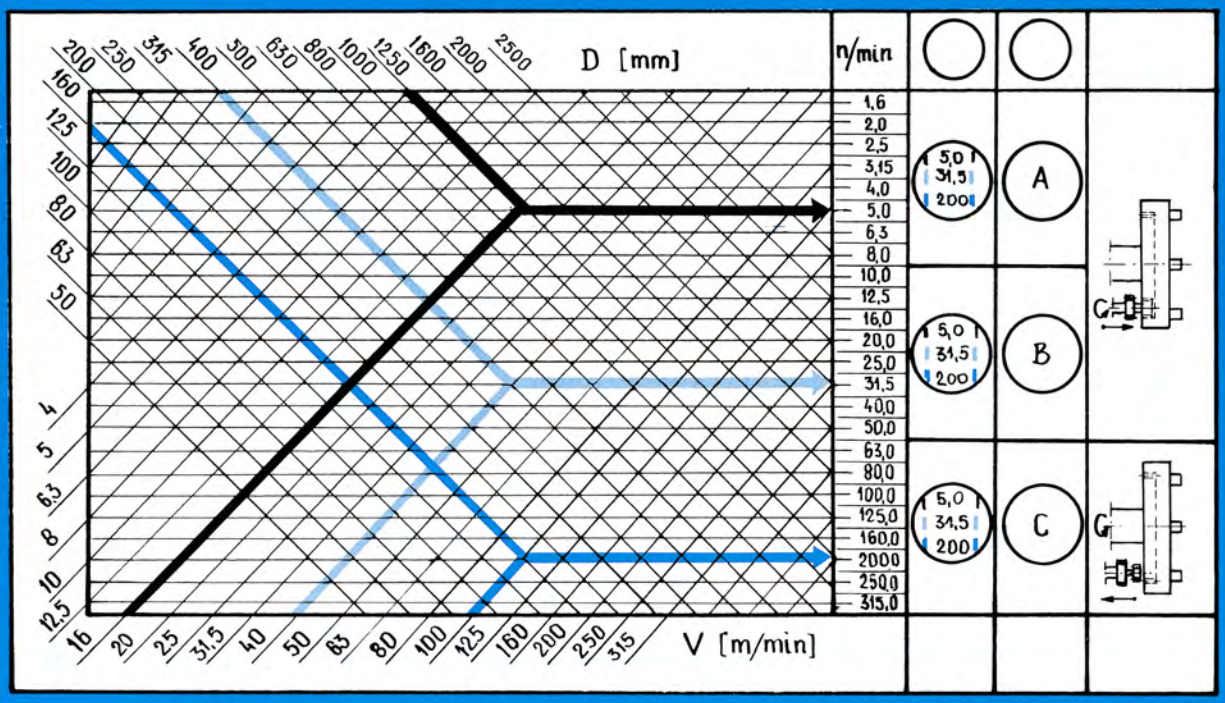

POREBA

Technical data and main dimensions

Working range		**TCG 125**	**TCG 160**	**TCG 200**
Height of centres	mm/in	625/24⅝	800/31½	1000/40
Max. swing over bed	mm/in	1250/49	1600/63	2000/79
Max. swing over saddle	mm/in	940/37	1290/50¾	1680/66
Turning length (by each 1000 mm 40'')	mm/in	3000—20000/118—787		
Weight of workpiece				
Free in chuck plate/at 350 mm, 14'' from centre of gravity	kG/lbs		4000/8,800	
Between centres	kG/lbs		30000/66,140	
Between centres with one rest	kG/lbs		35000/77,160	
Between centres with two rests	kG/lbs		40000/88,185	
Headstock				
Chuck plate diameter	mm/in	1250/49	1600/63	1600/63
Max. clamping dia. in chuck	mm/in	1050/41	1400/55	1400/55
Min. clamping dia. in chuck	mm/in		230/9	
Range of spindle speeds*	rpm	1,6—315	1,0—200	0,8—160
Number of speeds			24	
Spindle bore dia.	mm/in		105/4⅛	
Centre seat dia.	mm/in		110 H6 4 11/32	
Front journal dia.	mm/in		320/12 19/32	
Max. torque	kGm/ft. lbs		6300/45,900	
Drives				
Main electric motor rating	kW/HP		75/100	
Main electric motor speed	rpm		1500	
Rapid feed motor rating	kW/HP		3/4	
Rapid feed motor speed	rpm		1500	
Electric shaft motor rating	kW/HP		4/5.4	
Electric shaft motor torque	kGm/ft. lbs		2,5/18	
Tailstock traverse motor rating	kW/HP		1,1/1.47	
Quill travel motor rating	kW/HP		2,2/3.0	
Lubricating system motor rating	kW/HP		0,6/0.8	

***Range of spindle speeds**

TCG 125 1,6 - 2,0 - 2,5 - 3,15 - 4 - 5 - 6,3 - 8 - 10 - 12,5 - 16 - 20 - 25 - 31,5 - 40 - 50 - 63 - 80 - 100 - 125 - 160 - 200 - 250 - 315

TCG 160 1,0 - 1,25 - 1,6 - 2,0 - 2,5 - 3,15 - 4 - 5 - 6,3 - 8 - 10 - 12,5 - 16 - 20 - 25 - 31,5 - 40 - 50 - 63 - 80 - 100 - 125 - 160 - 200

TCG 200 0,8 - 1,0 - 1,25 - 1,6 - 2,0 - 2,5 - 3,15 - 4 - 5 - 6,3 - 8 - 10 - 12,5 - 16 - 20 - 25 - 31,5 - 40 - 50 - 63 - 80 - 100 - 125 - 160

TCG 125/160/200

Bed		
Bed width	mm/in	1100/43 9/32
Bed height above floor foundation level	mm/in	600/23 5/8
Bed length = turning length plus	mm/in	3550/140
Saddle		
Cross slide traverse	mm/in	800/31 1/2
Top slide traverse	mm/in	600/23 5/8
Tool cross section	mm/in	70x70/2 3/4x2 3/4
Max. chip cross section for steel 50-55 kG mm^2	mm^2/sq. in	60/.093
Max. cutting tool force	kG/lbs	10000/22,050
Feeds		
Number of feed rates		20
Range of longitudinal feeds/A,B,C/	mm/rev/ipr	0,18-5/.007—19
Range of 8-fold feeds/A,B/	mm/rev/ipr	1,45—40/.057—1.57
Range of 32-fold feeds/A/	mm/rev/ipr	5,75—180/.22—6.29
Longitudinal minute feeds	mm/min/ipm	11,2—320/.44—12.59
Range of transverse feeds	mm/rev/ipr	0,09—2,5/.003—.098
at engaging transmission gear 8:1	mm/rev/ipr	0,72—20/.028—.78
at engaging transmission gear 32:1	mm/rev/ipr	2,88—80/.11—3.14
Transverse minute feeds	mm/min/ipm	5,6—160/.22—6.29
Top slide range of feeds	mm/rev/ipr	0,09—2,5/.003—.098
at engaging transmission gear 8:1	mm/rev/ipr	0,72—20/.028—.78
at engaging transmission gear 32:1	mm/rev/ipr	2,88-80/.11—3.14
Top slide minute feeds	mm/min/ipm	5,6—160/.22—6.29
Rapid traverse of saddle	mm/min/ipm	4000/157 1/8
Rapid traverse of cross slide	mm/min/ipm	2000/78,74
Rapid traverse of top slide	mm/min/ipm	2000/78,74
Threads		
Number of metric threads		81
Threads cut with whole saddle	mm	1-192
Threads cut with top slide	mm	0,25—48
Number of inch threads		96
Threads cut with whole saddle	tpi	30—1/8
Threads cut with top slide	tpi	7 1/2—1/32
Taper turning		
Range of tapers turned		1:1,5—1:1000
Tailstock		
Quill dia.	mm/in	280/11
Quill rapid travel	mm/min/ipm	300/11 13/15
Tailstock rapid travel	mm/min/ipm	1500/59
Centre seat dia.	mm/in	70H6/2 3/4H6
Tailstock transverse travel	mm/in	+30/+1.18

WEIGHT		**TCG 125**	**TCG 160**	**TCG 200**
Machine with one saddle turning length of 4000 mm 157'' kos	kg/lbs	25000/55,120	30000/55,740	35000/77,160
1000 mm 40'' extra of bed length	kg/lbs	1200/2,050	1200/1,650	1200/2,650
Weight of additional saddle	kg/lbs	2000/4,400	2250/4,900	2500/5500